ESERCIZIO MOSFET AS

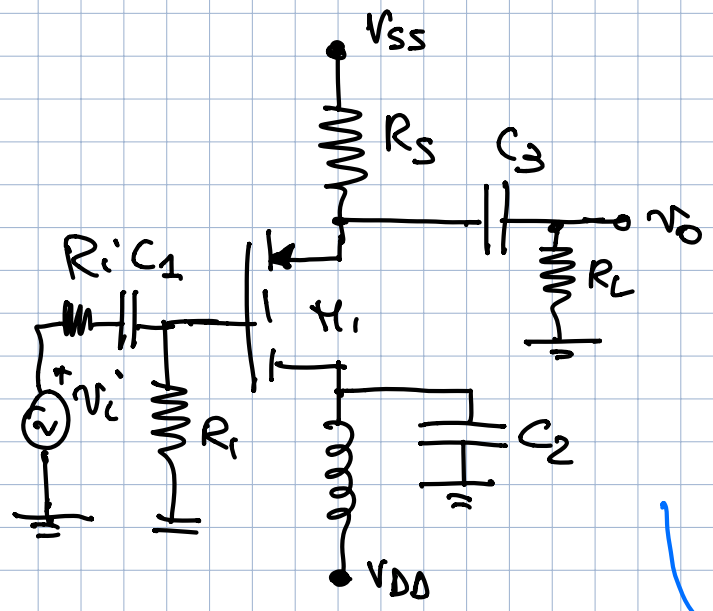

$V_{SS} = 9{,}2V$

$V_{DD} = -9{,}2V$

$R_S = 4{,}7\ K\Omega$

$R_i = 220\ K\Omega$

$R_1 = 2{,}7\ M\Omega$

$R_L = 270\ \Omega$

M_1: $K_P = 1mA/V^2$

$V_{TP} = -2V$

$\lambda = 0$

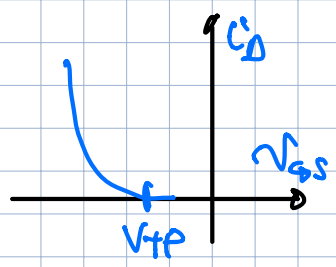

1) ANALISI DC

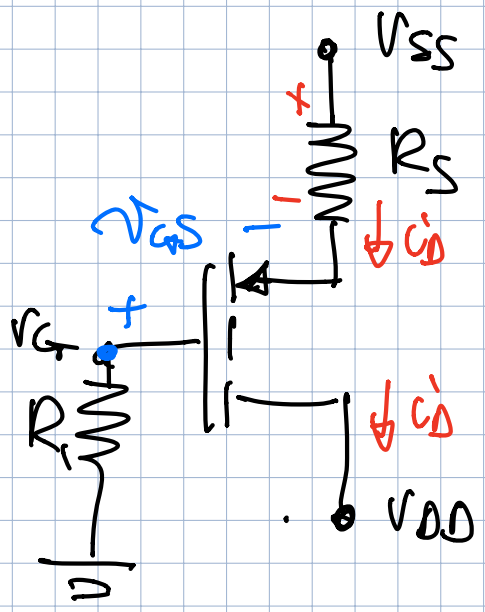

$V_G = 0$

SE MOSFET OFF

$V_{GS} = -V_{SS} < V_{TP}$

$\Rightarrow$ MOSFET "ON"

HP MOSFET "SATURA"

$$\begin{cases} V_{SS} = R_S i_D - v_{GS} + V_G \\ i_D = \frac{K_P}{2}(v_{GS} - V_{TP})^2 \end{cases}$$

$$i_D = \frac{V_{SS} + v_{GS}}{R_S}$$

$$\frac{2V_{SS}}{K_P R_S} + \frac{2v_{GS}}{K_P R_S} = v_{GS}^2 + V_{TP}^2 - 2v_{GS}V_{TP}$$

$$v_{GS}^2 - v_{GS}\left(\frac{2}{K_P R_S} + 2V_{TP}\right) + V_{TP}^2 - \frac{2V_{SS}}{K_P R_S} = 0$$

$b = 3{,}574$ $\quad$ $c = 0{,}085$

v_{GS} → $-3{,}55\,V$ ⇒ OK

v_{GS} → $-0{,}024$ ← NO $v_{GS} > V_{TP}$ ⇒ OFF

$$i_D = \frac{K_n}{2}\left(v_{GS} - V_{TP}\right)^2 = 1{,}20\ mA$$

$$V_S = V_{SS} - R_S\, i_D = 3.56\,V$$

$$V_D = V_{DD} = -9{,}2\,V$$

$$V_{DS} = V_D - V_S = -12{,}76\,V$$

$$V_{DS} < V_{GS} - V_{TP}\ ?$$

$$-12{,}76 < -1{,}55 \quad \text{OK !}$$ PMOSFET SATURAZIONE

2) PARAMETRI PICCOLO SEGNALE

$$g_m = \frac{2 I_D}{|V_{GS} - V_{TP}|} = 1{,}55\ mS \qquad r_o = \infty$$

3) ANALISI PICCOLO SEGNALE

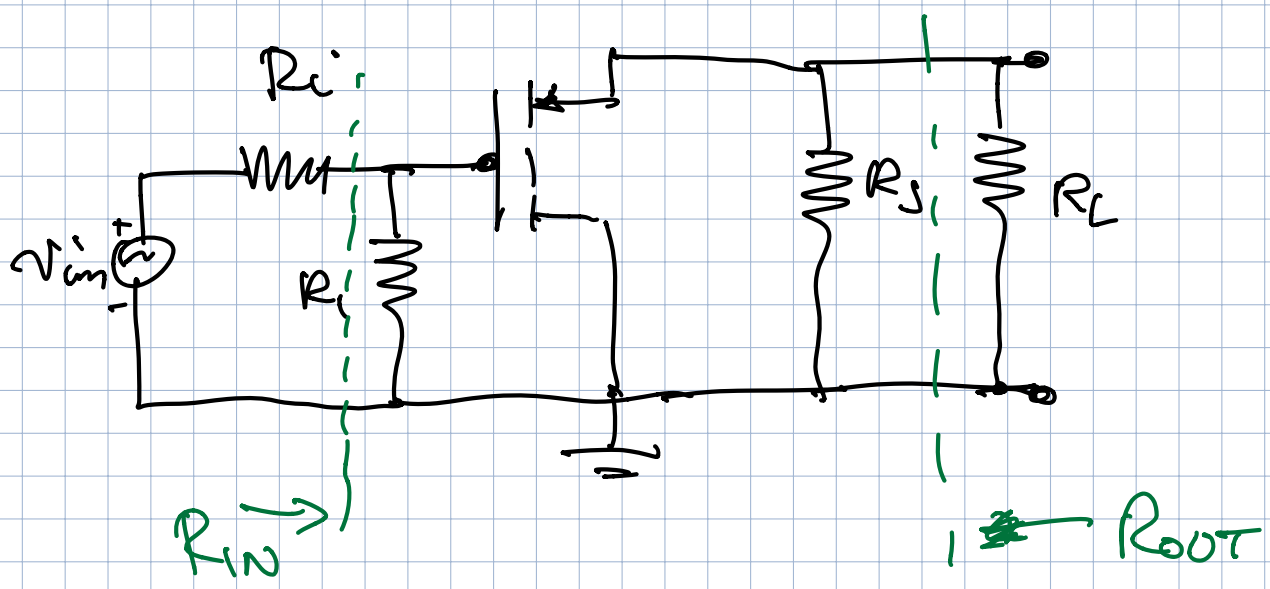

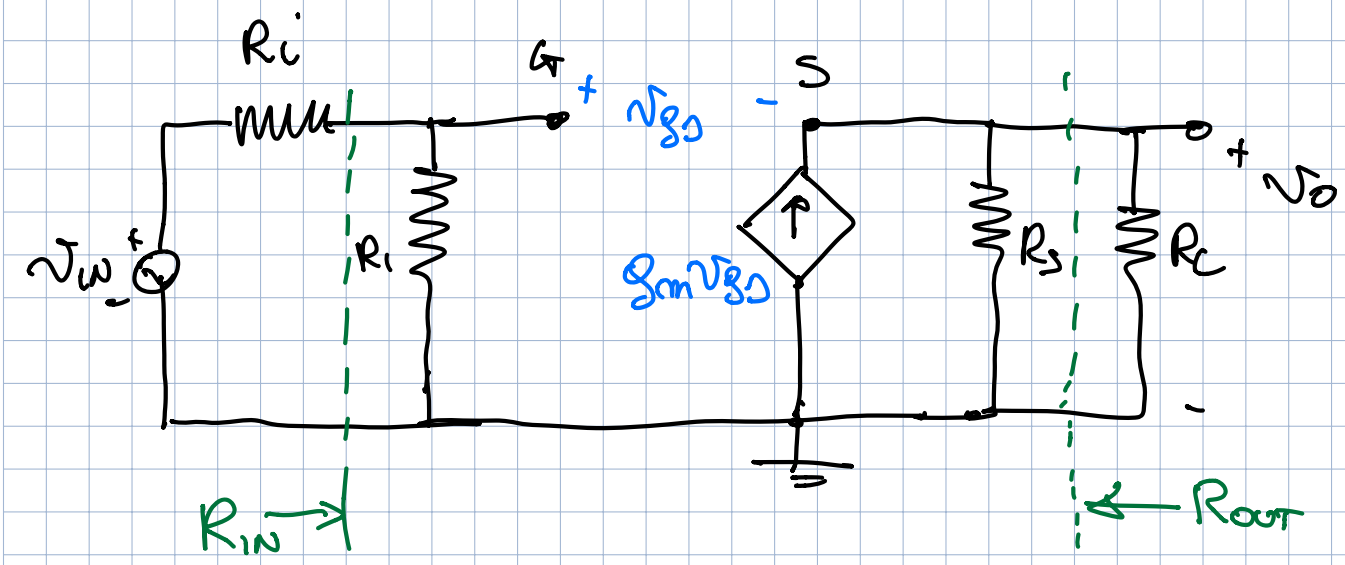

$$A_v = \frac{v_o}{v_{iN}} = \frac{v_o}{v_G} \cdot \frac{v_G}{v_{iN}}$$

$$\frac{v_g}{v_{iN}} = \frac{R_1}{R_i + R_1} = \frac{2700\,K\Omega}{220\,K\Omega + 2700\,K\Omega} = 0{,}925$$

$$v_o = g_m v_{gs} R_s // R_L$$

$$v_G = v_{gs} + g_m v_{gs} R_s // R_L = v_{gs}\left(1 + g_m R_s // R_L\right)$$

$$\Rightarrow \quad v_{gs} = \frac{v_G}{1 + g_m R_s // R_L}$$

$$\Rightarrow \quad \frac{v_o}{v_G} = \frac{g_m R_s // R_L}{1 + g_m R_s // R_L} = 0{,}283$$

$$A_v = \frac{v_o}{v_g} = 0{,}262$$

$$R_{IN} = R_1 = 2{,}7\,K\Omega$$

$$R_{OUT} = R_s // \frac{1}{g_m} = 4{,}7\,K\Omega // 0{,}645\,K\Omega = \underline{0{,}567\,K\Omega}$$